Let There Be REAL Light

Raymond Carbone

Ever since I can remember, Lucas has been known as the "Prince of Darkness". For all the defaming comments directed at this illustrious brand, the issues causing all the problems and worries are relatively easy to address and permanently fix.

Over the 45 years I have owned my Healey, I have probably heard, but NOT experienced thank God, every electrical LBC problem. For my part, I feel I have sidestepped most causes of non-working systems by cleaning, soldering, and coating (with dielectric grease) all connectors. I have also dismantled every switch (something you CAN do on LBCs), cleaned contact points, and also heavily coated their working parts with dielectric grease. As a result of these efforts, all my systems work "as original" and all switches and original main harnesses have been retained.

When initially considering some of the modifications I have implemented, thought was seriously given to the health and longevity of the original bits involved. Could the switches and wiring easily handle the added amperage and/or added activity? Would the added demands placed upon the original elements marginalize those components or the new modification? Could all be protected from harm in case of a simple or catastrophic component or system failure?

Through an evolution of easily reversible modifications, I have found it prudent to first analyze any inherent risk imposed onto the involved portions of the LBC's half-century electrical design. The following represents the minimum improvements that I felt were needed to establish a relatively secure base from which to extend present and all further modifications:

1. Expansion of the original 2-fuse protection through the provision of in-line easily hidden fuses protecting all critical circuits.
2. Addition of a number of relays to reduce current passage through key original components and switches.
3. Creation of auxiliary plug-in harnesses designed to carry the amperage needed to fully and safely address~~es~~ the requirements of new modifications and additions.

Although the total number of fuses added (13) may seem excessive to some, I chose to depend upon the original ~~(~~2~~)~~ fuses for protection of the unmodified components they were designed to service (fuse 1- heater blower, wipers, flasher, rev. counter, fuel gauge, brake switch, fuse 2- Horn) while adding critical circuit protection to all added and existing uncovered critical components (i.e. overdrive solenoid, tail/brake/head/driving lights, sound system, etc.). My choice of in-line fuse holders, ~~a~~ opposed to adding an additional fuse block, allowed me to easily add a fuse to an existing circuit and maintain the image of originality by

hiding it. However, this approach does require the creation of a Fuse Directory defining size, location, and circuit coverage as an assist to my aging memory.

Let's SEE what there is to SEE
(Halogen Headlight/Driving Light Installation)

In order to improve nighttime illumination, many have simply plugged in 7" halogen sealed beams without experiencing any difficulties. However, how sure were they that the beams were illuminating at full intensity or that these circuits, designed to service 50-year-old technologies, weren't close to overload?

When examining the wiring of the original headlight harness, you will note the low gauge wire used to carry the approximately 40-watt headlights and a total of 11.1-amps going through the light switch. Now consider that you are using this same antique harness with upgraded Halogen lights pulling as much as 65-watts (+63%) per side or as much as 15.1-amps being drawn through the same light switch. Add to this situation, the fact that many who had added the halogens also installed driving or fog lights onto these same unprotected circuits, and you may be placing a strain of greater than 23-amps on the original lines and headlight switch. It should be realized that these calculations only incorporate parking and taillights with the break and turn signals powered, separately, through the flasher circuit.

So, how does power flow through to the headlights? On my Austin Healey 3000 MkIII Phase 1 (as an example), power to the headlights is supplied from the battery through the solenoid's connection to the regulator and onto the ignition switch. From there, power is distributed to multiple circuits, including the light switch, and is forwarded on to the dipswitch. When the lights are activated, power from either the low or high beam dipswitch circuit is passed through a number of wires and connectors to that portion of the headlight plugs serving the selected beam. It should be noted that headlights, tail/parking lights, and driving light amperage must pass through the light switch, with the dipswitch involved in directing power to the selected beams. Again, since the low wiring gauge supporting the original headlight circuits was appropriate for 1950-version sealed beams, the addition of higher-amp halogen replacements and auxiliary driving/fog lights could definitely heighten the potential for a catastrophic circuit failure and even defeat the original modification objective by choking actual light emissions.

When reviewing the design below, keep the following objectives in mind:

1. Reduce amperage on all original circuits and components (wiring, switches, connectors).
2. Provide protection to all circuits and components involved.
3. Delivery of full operational performance by the featured add-ons.

In short, this approach retains, unmodified, all original wiring and components and significantly reduces amperage on these circuits to well below design limits. This was accomplished by limiting the original headlight circuits to activating functionally-focused relays that, in turn, direct battery power through an increased-gauge wiring harness to the improved lighting units.

Further, to isolate primary illumination (head/tail/parking/panel lights) from all other circuits, power to the light switch is brought directly from the battery with the original link from the ignition switch disconnected. For maximum protection, in-line fuses were selected and installed at all power supply points. The following diagram (Figure 1) illustrates the new circuitry and fuse protection:

Figure 1

Relay activated Head and Driving Lights powered directly from Alternator Batt terminal.

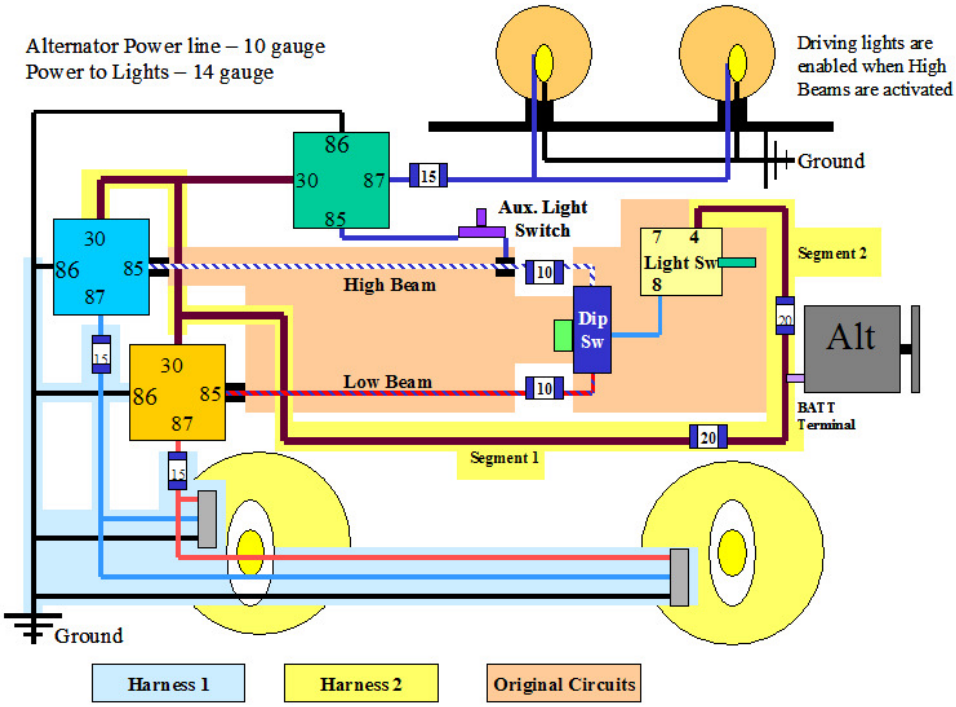

Kept in mind that when you see a reference to "battery" connection, it refers to a power tap point either at the battery-side of the starter solenoid or at the alternator battery terminal (where installed). These sources of current represent convenient places at which the battery and charging system are connected over the car's largest open path.

Harness and Adapter Build

To begin with, (2) adapters and (2) harnesses must be created. The original high and low beam circuits will be retained to switch the relays that will gate battery power to the selected beam. The adapters are necessary to transition the original circuit's bullet connectors to the spades required for connection to the relays. Replacing bullets with spades on the original harness and plugging the lines directly into the appropriate relay

posts can eliminate the need for the adaptors.

When preparing for implementation, you will notice that I have not provided wiring lengths. This is due to the fact that wiring lengths will be highly dependent upon your choice of component placement, routing, and inherently differences in car models.

1. Our first harness consists of (3) 14-gauge wires (high & low beams and ground) with (2) 15-amp in-line fuses (see Fig. 1 Harness-1). This harness provides battery power to the high or low sealed beam plug segment when the related relay is switched on. It should be noted that the wire gauge suggested for this harness may seem overkill by some, however, this path will allow the passage of full power to the halogens and also provide margin to service future add-ons. Further, a 15-amp fuse was selected to protect both high and low beam circuits and was based upon a high beam demand of 65-Watts per halogen plus a margin of at least 50% (130w/12.5v=10.4*150% =15.6a).

2. Harness-2 consists of (2) branches with, in my case, a 20-amp in-line fuse protecting each segment. Power to this harness comes from the battery and supplies main current to the relays and light switch. Because the relay-directed branch is built in a series-connected configuration, a 10-gauge to 12-gauge construction was chosen in order to provide a margin above the maximum current anticipated.

3. Segment-2 of Harness-2 will extend from the battery to the light switch and be installed to replace the original power line coming from the ignition switch. This was done to isolate the head/tail/parking and panel light functions from failures in other electrical areas. Since the light switch activates headlight relays through the dipswitch, as well as powers other sources of illumination (tail, parking, panel, other), I would suggest you evaluate using 12-gauge to 14-gauge wire for this section.

Headlight Modification Implementation

At this point you are ready to implement the changes.

1. Install 10-amp in-line fuses onto each headlight beam line (red/blue, white/blue) coming from the dipswitch and conveniently close to the switch. This will protect all connectors and original headlight wiring from the cabin to the front of the car.

2. Disconnect battery power and de-install both headlights. Remove pans with lines and unplug from the original harness. Remove the rivet on the headlight plugs and separate the original wiring from the pans.

3. Mount all relays to the radiator-side of the wheel well access panel on the passenger side and establish a secure ground.

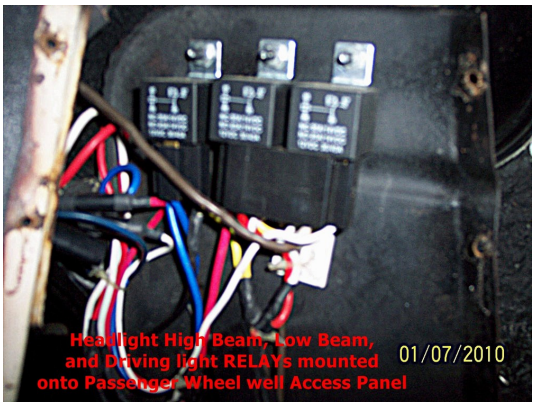

4. As you have previously dismantled the headlights, route Harness-1 to left and right headlight locations making sure to route the wiring over the grill as original. Pass the new harness ends through each of the light pans and reinstall the headlight plugs. Reinstall the headlights and attach Harness-1 spades to the appropriate relay connections.

5. Connect ground wires between the appropriate relay connectors and a common ground location previously established.

6. Install Harness-2 by routing along inner front passenger fender from the chosen battery connection passed the right side of the radiator and down to the relays. Attach the appropriate harness spade connections to the relays and reinstall the access panel.

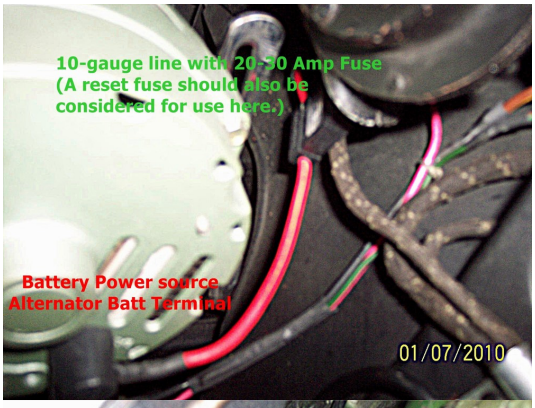

Please note: The Battery connection tap can be established at the Alternator Battery terminal or the battery side of the Starter Solenoid.

7. Route the second segment of Harness-2 from the battery connection, through a convenient port in the engine compartment bulkhead to the light switch. Remove and tape off (or totally de-install) the original light switch power line coming from the ignition switch and replace with the Harness-2 connector.

8. Finally, connect Harness-2 to the battery source, review all connections, and reconnect the battery.

Driving Light Implementation

When expanding the headlight relay implementation to include driving lights, it should be kept in mind that many state require driving lights to only be activated in concert with high beams.

1. Add a double spade connecter (shielded) at the high beam side of the dipswitch and connect a line to a conveniently installed switch.

2. Route a line from the switch, through the engine compartment bulkhead and to the driving light relay installed along side the headlight relays on the passenger wheel well access panel. Attach this line to the appropriate port on the relay.

3. Extend battery power from Harness-2 at the closest headlight relay to the driving light relay. This may be built into Harness-2 originally or added through the installation of a (shielded) dual-spade extension.

4. Install an in-line fuse onto the power line for connection onto the driving lights. Be sure to also install a ground wire that is either routed back to the master ground previously established for the relays or a locally convenient spot near the lights.

Do you Now SEE what I mean?
Keep in mind that although I have presented my selection of wire gauge and fusing as an example, your installation will depend upon the specifics of your objectives and personal selections. I strongly suggest that you over compensate rather than minimize as the cost factors between minimal and max are small and you only want to do this once. As a final caution, since this is a non-trivial installation, please review all aspects of your installation before applying battery power.

Now that you have installed relays and upgraded lines and connectors, you will be able to enjoy the full performance of your head and driving lights. Additionally, now that you have provided relief to your old components and upgraded the capacity of your power delivery circuitry, you may consider some of the latest illumination technologies that will fit in your headlight bays. So go out for a drive and Really SEE what you were missing.